FA-AS
Automatic Antenna Selector

Construction and User Manual*

Antenna selector for Icom Transceivers with one antenna socket. For use with up to 4 separate antennas, each operating frequency may be automatically or manually selected, also with an optional transverter. Possibility of using separate transmitting and receiving antennas.

*) Recent version downloadable from www.box73.de.

Introduction 3

Circuit 5

Mounting the main board 6
DC supply test 8
IC mounting 9
Socket board assembly 9
Relay and LED assembly 10

Case housing 12

Assembly of the control cables 13

Function test 14
Control via line voltage 14
CAT interface test 15

Configuration 15
Working modes 15
Baud rate 15
Transceiver CIV address 15
Check routine for transverter mode 15
Control power for transverter mode 16

In use 16
Programming antenna selection 16
Automatic mode 17
Manual mode 17
Transverter mode 17
Further possible applications 17
Footnote on use with CAT interface 17

Attachments
Parts list 18
Mounting plan 19

When operating middle to low price range transceivers with only one antenna connection it is often desirable to employ the use of an antenna selector switch. The first type is the manually configured variety which will require the carrying out of diverse specialist adjustments. Considerably more convenient however is to use an additional external piece of equipment that, depending on the actual band in use, automatically switches to the desired antenna.

This was the starting point (as fully described at [1]) for the FA-AS kit. It was conceived for the Icom IC-7300 (hence the order number BX-7300) and also works well with other Icom transceivers. The control for the antenna selection comes from the Icom transceivers provided line voltage which will vary according to the selected Amateur Radio band. As a further option it is possible to connect both pieces of equipment over the CIV interface (CAT) so that operating on classic SW and WARC bands and monitoring on VHF may be distinguished. In addition there is the convenience of connection between antenna selector and transverter output.
The kit consists of main and socket boards together with all the required kit parts and also a printed metal housing. It comes with components exclusively wired for the kit.
The requirements for building are also straightforward when the corresponding kit building instructions are followed. The housing consists of base plate and top lid along with front and rear panels, the joining of which is accomplished with the M3 tapped cubiform metal blocks provided.

Table 1. Technical data

Suitable controller	Icom transceiver
Control information	Line voltage or CIV command
HF connections	up to four antennas and one transverter
	Z = 50Ω, unbalanced
HF power	≤ 150W
Frequency range	0 … 72MHz*
Attenuation	≤ 0.1dB
SWR	≤ 1.2
Antenna memory	EEPROM
Working voltage	12 … 15V
Current drain	approx. 100mA @ 13.8V
Dimensions (W × H × D)	238 × 33 × 240 mm³
Weight	≈ 1.8kg
* Automatic mode 1.8 … 72MHz	

Tools and materials required for building:

- soldering iron 60W … 80W with pencil type fine point tip along with 0.5 … 1mm. Resin core solder
- 100W soldering iron with flat tip
- side cutters for electronics
- flat nose pliers
- flat tip screwdriver
- small file
- spanner SW18 to mount the SO 239 sockets
- multimeter
- 50Ω dummy load (with temporary 100W capacity)
- bench power supply 10 … 15V @ 0.2A with adjustable voltage and current thresholds
- DC supply cable with 2.1 mm hollow round plug (plug connector with kit parts)

Picture 1a. Front view of the fully built FA-AS

Picture 1b. Rear view of the fully built FA-AS

Before mounting the board one should check and verify the contents of the kit with the parts list provided. It contains information on the labelling of kit parts. Make sure to sort the resistors to avoid accidental substitution during the build. If sometimes the colour coding rings are not so easily identifiable then it is recommended to use an Ohmeter to check the value, otherwise, poor performance due to an incorrect resistor is subsequently not so easy to trace.

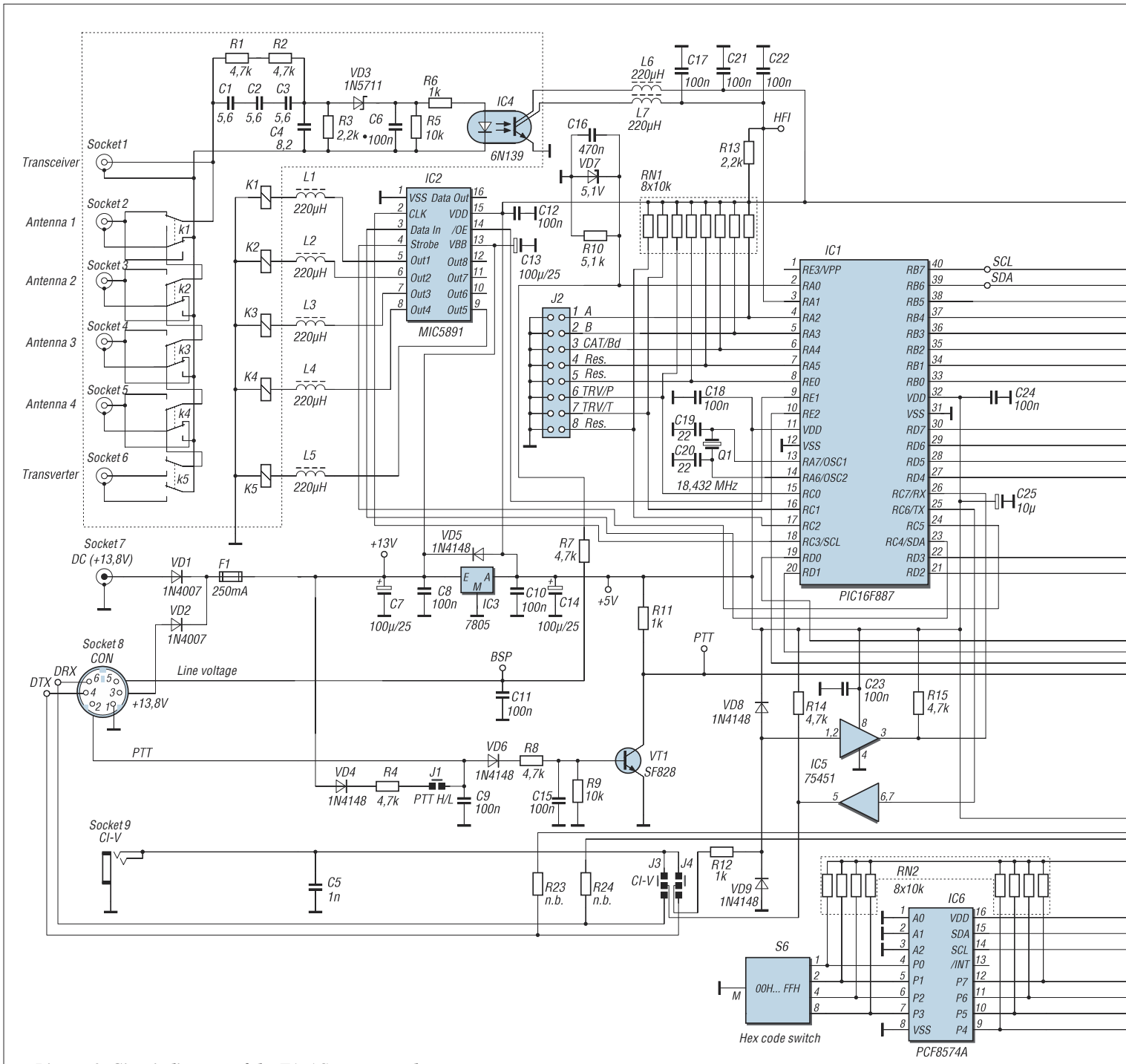

Picture 2. Circuit diagram of the FA-AS antenna selector

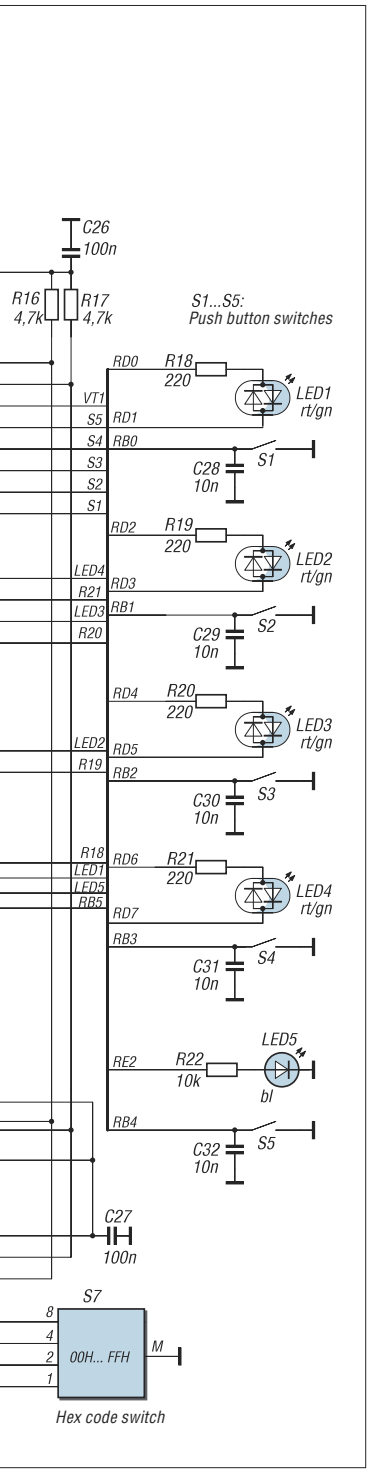

Circuit

Central to the circuit is a microprocessor PIC 16F887 in a 40 pin DIL housing. Its defined firmware is essential to the operation of the device.

For the antenna and transceiver connections there are five SO 239 sockets provided on the rear of the FA-AS along with a BNC socket for the transverter.

HF parts (delineated in picture 2 with a dotted line) and control electronics are found on the same board and isolated from each other by metal screening.

In the case of non-selection, the respective outer conductors make no circuit connection to the remaining sockets. This prevents adjustment problems that could occur where the coax cable of the not selected antennas starts working as a random additional counterpoise to the active antenna.

Were this considered unnecessary then the separating gap between the contact points on the socket board could subsequently bridge over.

In the standby state, the outer conductor of the connected cables is short circuited with the matching inner conductor. As long as the FA-AS is switched off the transceiver associates with antenna 1.

The SWR at the end of the connected antennas feed line should be up to about 3, within a certain range that otherwise the transceivers antenna tuner can't match, in any case, higher values on account of extra coax cable attenuation are unfavourable.

For the switching element there is the 12V power relay K1 to K5. Controlled by IC2 this takes its control commands over a serial interface with IC1.

As well, on the rear of the FA-AS there is a separate DC supply socket for a 2.1mm hollow round plug (socket 7), a 3.5mm jack socket for the CIV interface (socket 9) and a 6 pole miniDIN socket over which the PTT signal, line voltage and if applicable the transceiver supplied working voltage are sent (socket 8).

Many Icom transceivers, including the IC 7300, have a 13.8V supply on one pin of the ACC socket, to power peripheral equipment. It is rated 1A at most and can be used to power the FA-AS and in this case will be switched on and off together with the transceiver. Alternatively, the DC supply to socket 7 is possible noting that the FA-AS has no independent on/off switch.

Operation of the FA-AS is carried out with the aid of five push button switches S1 to S5. They lie directly on the microprocessor port pins and through internal pull up resistance achieve a 5V potential.

LED 1 to LED 4 (bicolour red/green) and LED 5 (blue) indicate the working status. The line voltage fed from socket 8 passes across the voltage divider on R7 and R10 to port RA0 of the PIC and thus to the A/D converter.

The inverted PTT signal from VT 1 is fed to port RB 5 and analysed in the case of separate transmit and receive antenna operations. It may be running both either high or low. With direct connection to Icom transceivers it must be the latter. Then the solder bridge J1 must be closed. Through the port expander IC6 the controller reads the presented hexadecimal code address from the coding switches S6 and S7 via the I2C Bus. The driver IC SN75451 (IC5) is associated with the CIV interface and is connected to the EUSART module IC1 TX and RX ports.

The jumper contact points at J2 serve to install parameters and system requirements to the FA-AS.

The timing oscillator of the PIC works at 18.4320MHz. This peculiar frequency guarantees that the internal frequency pitch Baudrate generator may produce exact values for the desired CIV transformer rate. Centre connections on J2 are for 1200 Bd. or 9600 Bd. settings, the lower rate conceded to older transceivers.

For safety, when the transceiver is not transmitting, the relay contacts and their associated inputs are naturally load free. After that the controller comes in with an HF indicator. Manual switching during transmit is blocked by the firmware. Line voltage commands and data traffic over the CIV interface are likewise non responsive.

The HF indicator is adjacent to the transceiver input of the FA-AS and activates with some 5W of power. IC4 on the HF side is separated from the remaining circuit by a metal screen. Its output is fed to port RA 1 of the processor whose A/D converter evaluates the DC voltage. The FA-AS requires a supply voltage between 12V and 15V and can use a regular station supply such as that offered by the transceiver.

IC3 stabilises the working voltage from the supply voltage to 5V. The current requirements of the apparatus are a maximum of 100mA @ 13.8V. It is attached to the relay switch circuit.

Mounting the main board

If only for the sake of a well completed job, the circuit board is supplied preprinted with the component layout. This makes it a little easier to solder the additional pieces into their correct positions, equally how those might be found in the event of investigating a fault.

Attention: N.B. Regular constructors reading this should bear in mind that if the board with the SO 239 sockets is finished and soldered to the main board then it's expedient to solder the relays first.

The mounting begins with the soldering of the surface components in this case resistors R1 to R22. Using the multimeter set as Ohmeter these should be checked for safetys sake so that no erroneous substitution can occur. Just a little note here that the 4.7 KΩ metal film resistors R1 R2 and R7 may be distinguished from the carbon film resistors by their blue coloured base. R23 and R24 are left unmounted.
Then follow the chokes L1 to L7 they look a little fatter than the resistors. (Don't get confused and swap R18 … R21!)
After, the diodes VD 1 to VD 9 should be installed. VD1 and VD2 are 1Adiodes 1N4007, VD3 is a Schottky diode and VD7 a 5.1VZ diode, or by any other name, a universal 1N4148 diode.
Next are the capacitors and both of the resistance networks RN1 and RN2 in sequence. The correct installation orientation of the electrolytic capacitors should be adhered to. The positive connection is clearly marked on the board and on the component the negative side is usually marked, generally the side with the shorter wire.
N.B. on the written side of the resistance network cases there is a printed spot, this marks pin 1 and is also labelled on the board. Here great care must be taken that they are correctly positioned as they are very difficult to remove.
Following on, the transistor VT1 (take note of the correct orientation printed on the board), the IC socket for IC1, both the haexadecimal encoders S6 and S7 and the push buttons S1 to S5 can be soldered.
With the IC socket, the indentation should be in the direction of the one marked on the board. This reduces the risk that IC1 is later set incorrectly in the socket. The encoders have a point on the casing upperside which after soldering must match up with the corresponding mark on the board.
After soldering, the five push buttons must have their frame edges sitting on the board. With the soldering, not too much solder should flow through the holes towards the buttons so as not to be the cause of a subsequent short circuit.
Now follows the fitting of the three input connectors socket 7 socket 8 and socket 9. Here too, their undersides need to sit on the board.
Subsequently the fuse holder for the cut out fuse F1, the two row connector strip J2 and the Quartz xtal Q1 should be soldered in place. The last one should be mounted with an ap-

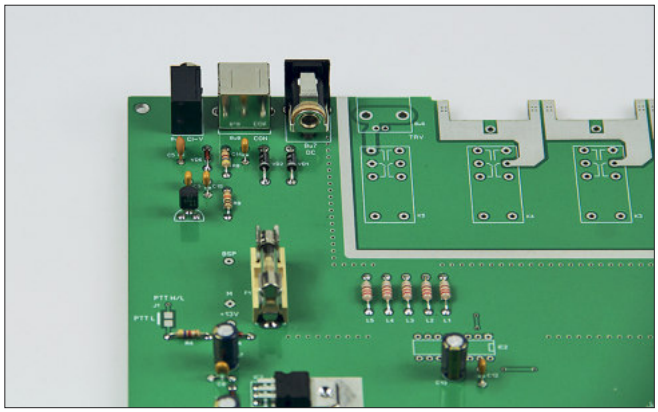

Picture 3. View of mounted parts in the area of antenna sockets 7 to 9.

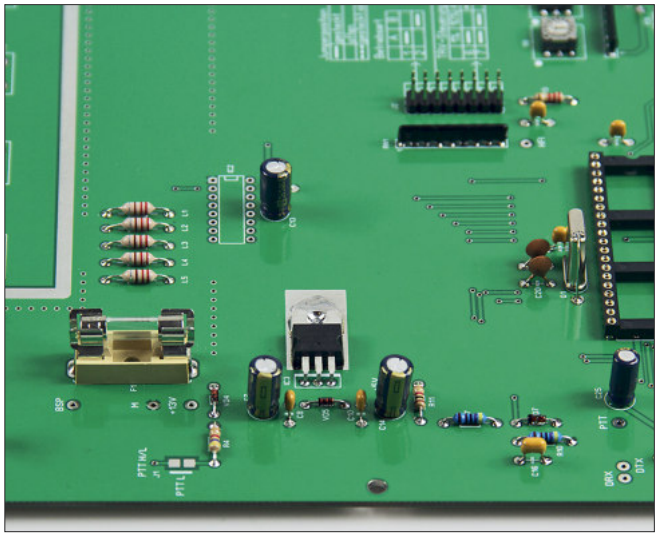

Picture 4. Mounted components in the area of the DC supply and relay control.

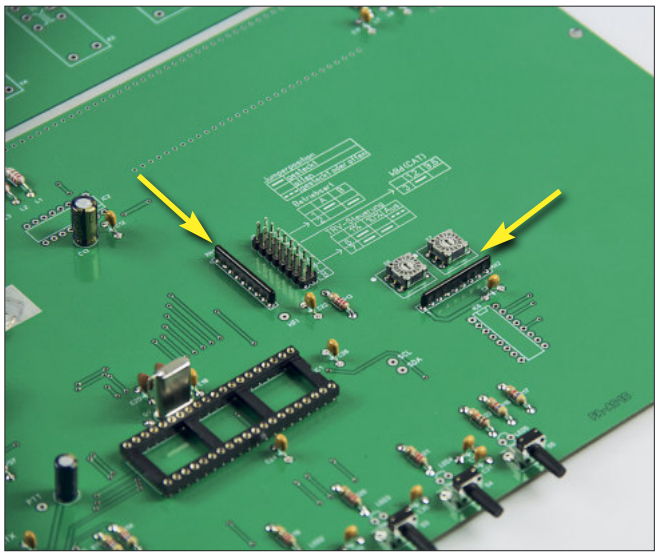

Picture 5. Soldered coding switches and resistance networks

proximate 0.5mm spacing off the board so as to avoid an eventual accidental short circuit caused by solder flows towards the Quartz casing.
A short piece of wire is soldered adjacent to the casing. It is to be noted that the Quartz housing is to be only briefly heated and very quickly soldered with the 400 deg C. soldering iron and only for as long as the solder flows. (If you're not confident soldering this particular case then the piece of wire can be left out as it only serves to additionally reduce any spurious emission of the already well constrained Quartz oscillator and has no special other function.
Pictures 3 to 7 show various stages of construction and can be used to show orientation. For the first IC, mount the 5V voltage regulator IC3. This is shown mounted in picture 8. First the three connectors must be bent with the aid of some tweezers at about 4mm from the housing. These will be fixed into the holes before laying the chip flat in the correct position on the board. Under light pressure (to transfer heat to the wider casing) warm the top end of the flat cooling vane of IC3 with the help of a 100W soldering iron and at the same time tip some solder into the inside of the 3.6mm hole in the cooling vane. After a short time the casing will be hot enough so that any solder remaining in the crack under the IC runs away.

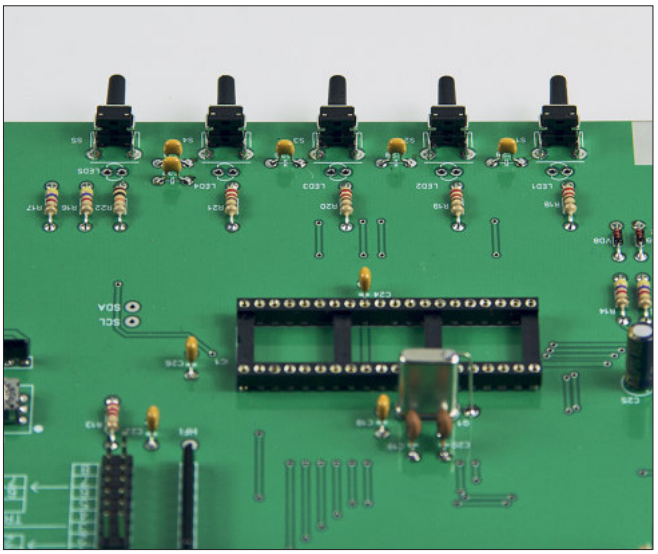

Picture 6. Mounted push buttons

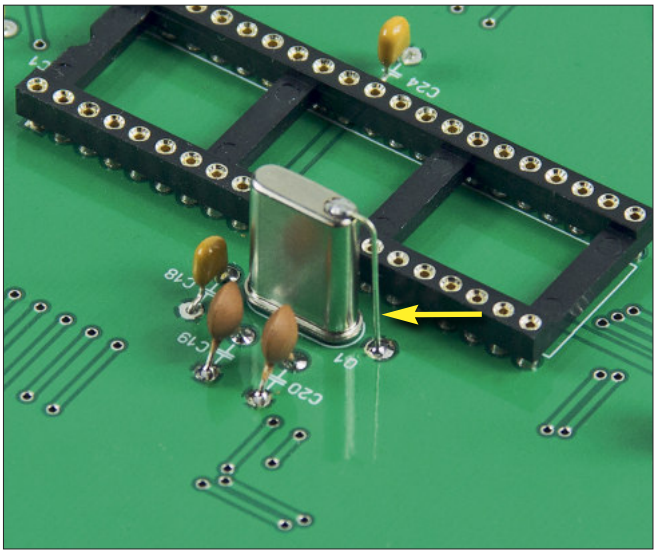

Picture 7. Earthing wire on Quartz housing.

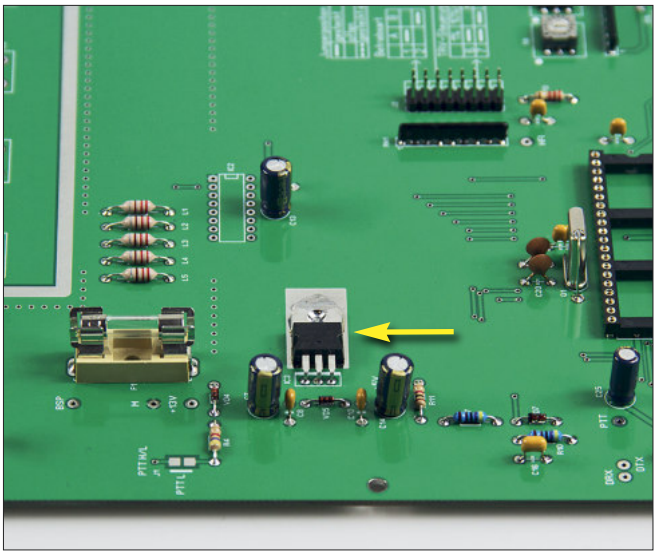

Picture 8. Soldered 5V voltage regulator

Testing the DC supply

Using the kits accompanying hollow round plug and a twin core cable, the DC supply should be assembled. The supplied fuse should be placed in its holder and the bench power supply set to 12V with a current threshold of 0.2A. The voltage output from the bench supply is now connected via the DC supply cable to socket 7. With the multimeter at the +5V test point (picture 9) there should be a reading of between 4.9V and 5.0V. If not, then it's the old task of finding out why and correcting the problem before mounting any more components. As a reference point for calibration for example, the test point M, near to the fuse, may be used. When everything is in order the DC supply and board may be disconnected.

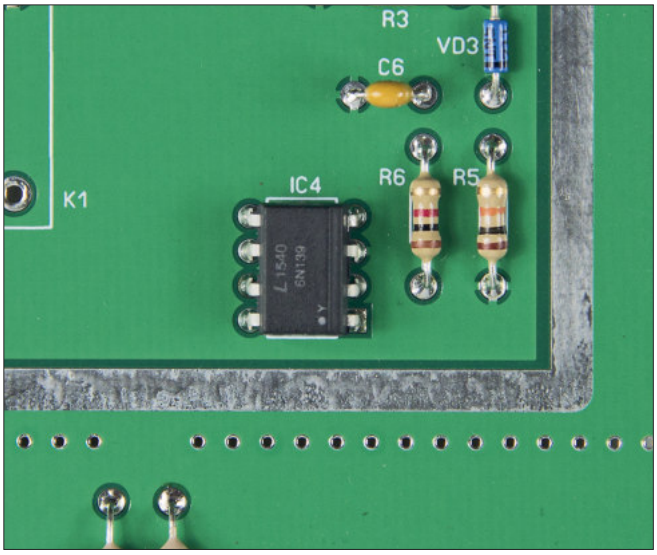

Picture 11. Optical coupling device IC4 soldered in position.

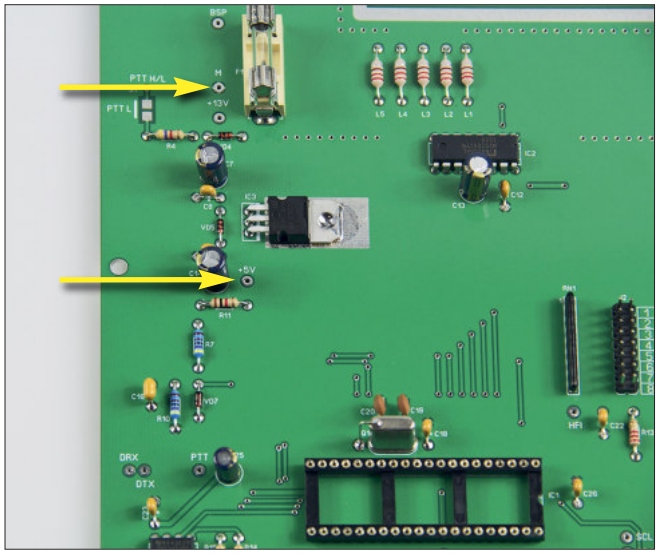

Picture 9. Site of test point M and +5V.

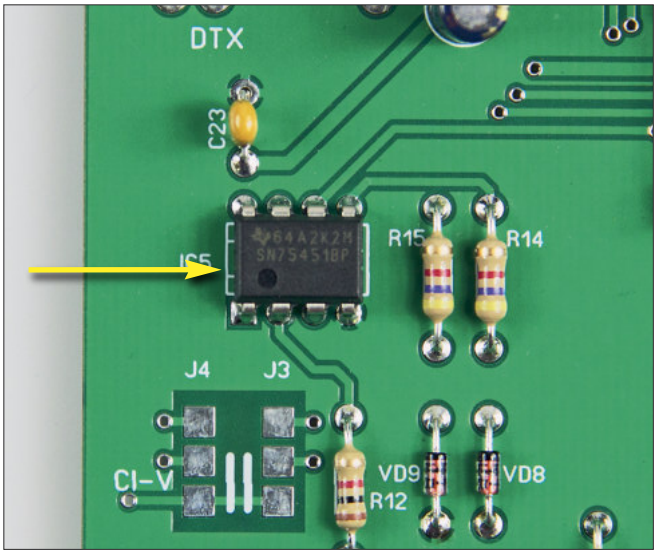

Picture 12. With IC 5 the marker point must be nearest the edge of the board.

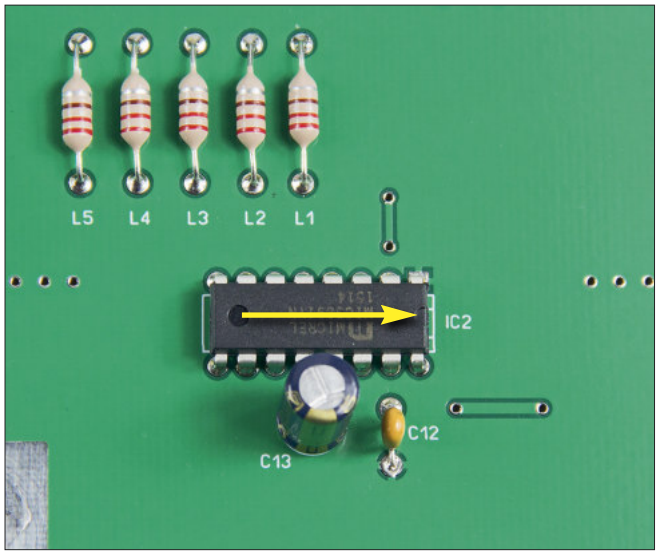

Picture 10. Correct build positioning of IC 2; the site of the indentation (arrowed) is to be paid attention to.

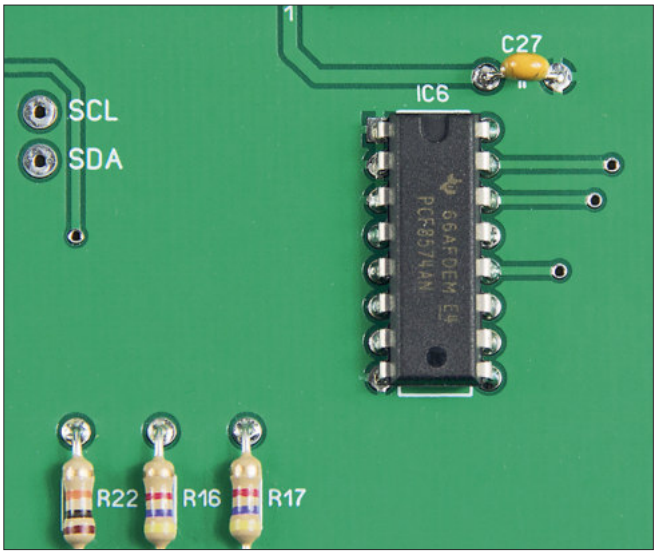

Picture 13. Position of IC 6 after mounting.

Mounting the IC's

Now follows the mounting of IC2, IC4, IC5 and IC6. It is of course, crucial they are mounted in the correct orientation. The position of the indentation must correspond with the diagram on the circuit board. The soldered IC's can be seen in pictures 10 to 13.

Mounting the socket board

The approximately 1.5mm gap on the back edge of the main board is so designed that the socket board can be inserted later. The milled corners may however need a little further rounding off with a small file and lastly, the socket plate must sit flush in the main board gap as shown in picture 14. With the dimensions of the SO239 sockets adhering to as high a tolerance as possible it can be that a negligible amount of filing is required afterwards. The aim is that when the sockets are mounted and sitting in their corresponding holes there is as little play as possible and that when the are being screwed and unscrewed they don't move or twist and remain stable. In this case the flat side of the hole (shown in picture 15) may be carefully and gradually worked so that the fitted socket has no movement. (In practice only a few file strokes are needed).
Now the five SO239 sockets are set in a row on the socket board with the copper side and solder tags facing the same direction, the nuts located and turned hand tight. Then the socket board may be screwed to the rear panel using three black countersunk cabinet screws and M3 × 6 nuts. The sockets must be aligned as much as possible central to the rear panel holes and not touching (as shown in picture 16). With the aid of an appropriate spanner the nuts on the copper coated side of the board are tightened. After which the rear panel together with the socket board are joined together with the main board using two metal blocks and two M3 × 4 housing screws and two M3 × 4 cylinder screws. The socket board is now in the position it will take in the finished housing and can be mechanically fixed and electrically connected.
There now comes to pass the joining together of the solder connections of the sockets and main board by the use of a 100W soldering iron and sufficient solder for both sides to be soldered both from the top of the board and from the underside. This part is shown in a section of the top side of the main board in picture 17.
When soldering in the corner of the main board it is easier to have it inclined by 45 deg. Also to bear in mind is that the insulated leg at any one time is not accidentally bridged to the adjacent socket section. The legs are quite wide with a limited tolerance, make sure to check the alignment.

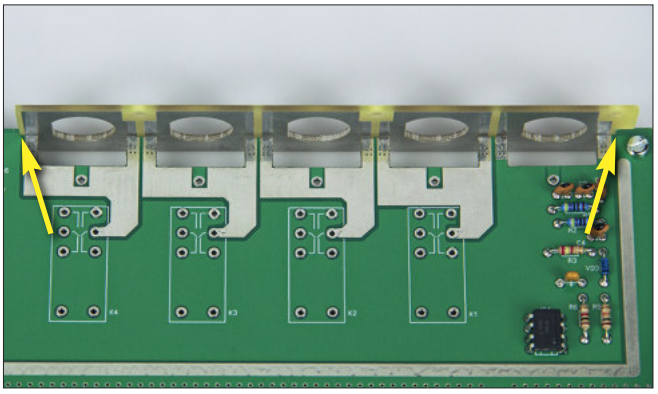

Picture 14. The socket board after a little filing, must fit exactly in the gap of the main board.

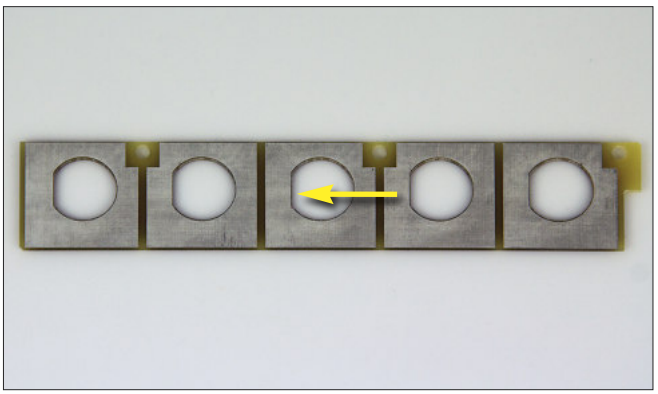

Picture 15. If necessary only the flat edges of the through holes should be carefully worked.

Picture 16. The five SO 239 sockets should be mounted such that they are centred in the holes on the rear panel.

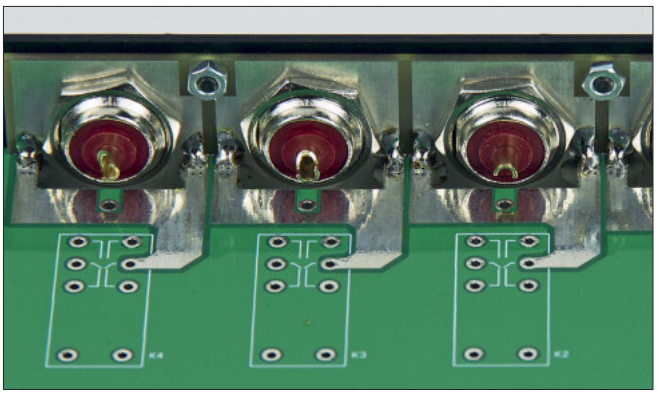

Picture 17. Shown here a section of soldered main board and sockets in a row.

After this the housing rear panel should be unscrewed so that during the next stage it won't be accidentally scratched. The connections between the solder points of the central conductors of the sockets and the main board are made with short pieces of 1mm diameter silvered copper wire (picture 18).

Building the relay and LED's

After the socket board is completely mounted the BNC socket and the five relays are soldered, they should lay flat on the board.

Then next is to prepare the five LED's for mounting. The advice in this case, so they aren't accidentally mixed up, is that the blue one (LED 5) which has a clear glass should be separated from the bicolour LED's whose plastic bodies appears slightly opaque. Cut ten pieces of wire insulation of 22mm length and push onto the LED connection wires. These must be bent 90 deg. att 12mm from the LED body and will appear as shown in picture 19. Subsequently when viewing the LED's from the front you must make sure that the longer of the two wires is located to the left. From the length of the insulator material the installation height off the main board is a given and should be around 10mm.
The front panel serves as a template for adjusting the LED's before soldering the connections. Now take two of the metal cube joining blocks and attach them to the board with M 3 × 4 screws as shown in picture 20. Then take the LED's and their connectors and fit them to their respective holes (LED 5 is the light diode with the clear glass housing). Afterwards loosely screw the front panel to the metal blocks with two black housing screws, now the LED's can be evened up parallel and best positioned in their respective holes (picture 21). Now the LED's can be soldered and the front panel unscrewed again.

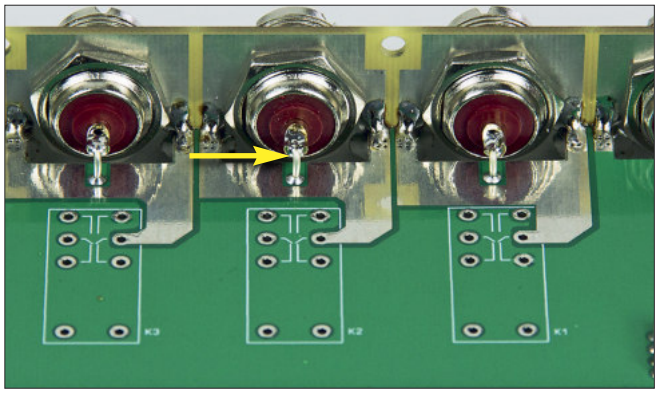

Picture 18. The solder tag of the inner conductor of each socket is joined to the main board with the help of a piece of silvered wire.

Picture 19. Prepared LED for building.

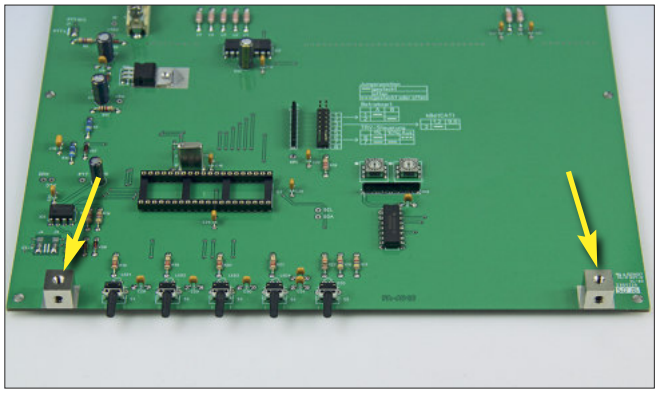

Picture 20. Position of the two metal blocks for attaching the front panel.

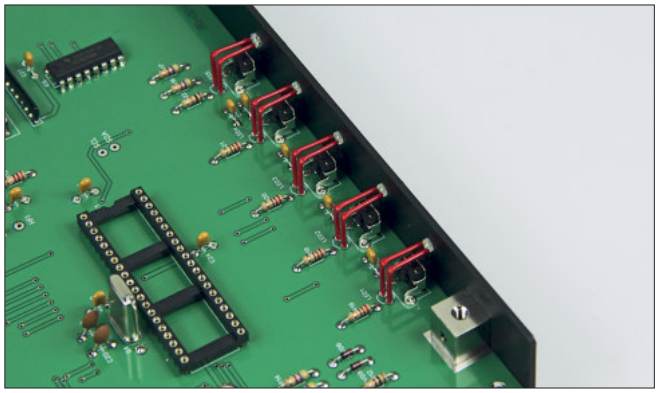

Picture 21. Fully aligned LED's, with help from the front panel.

With that the main board is finished, there remains to close the solder bridges J1 along with J3 and J4, as shown in pictures 22 and 23. Lastly the microprocessor should be placed in the DIL socket (picture 24).

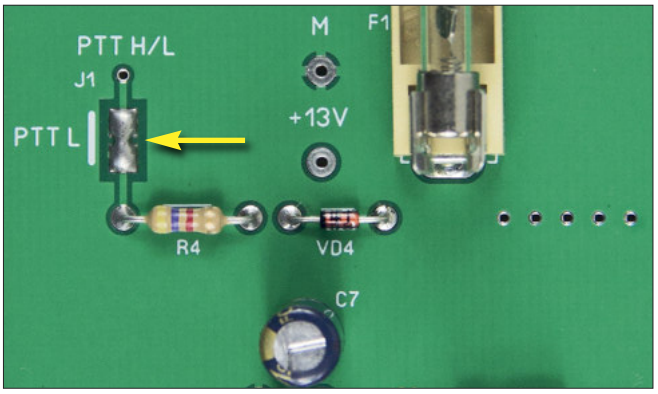

Picture 22. Closed solder bridge J1 for a low active PTT circuit.

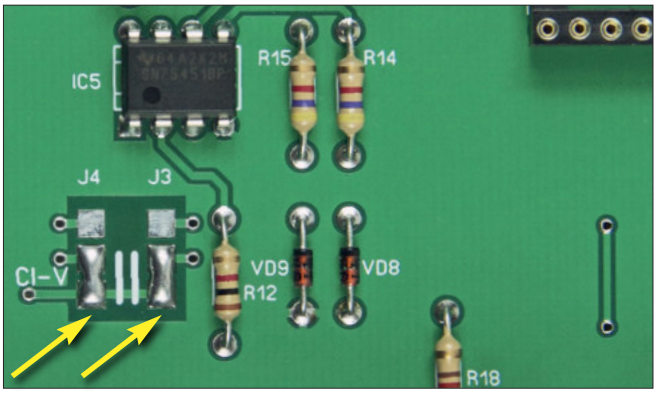

Picture 23. Closed solder bridges J3 and J4 to join the CAT data circuit with the CI V connection socket.

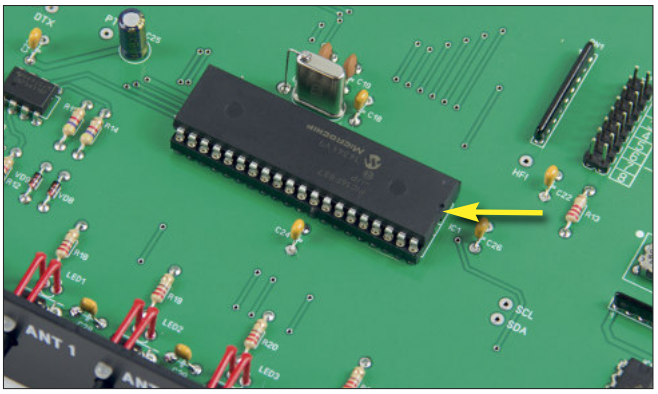

Picture 24. The microprocessor must be fitted to the mounting in this position; the indentation on the casing serves for the orientation.

Housing

To join the main board and the metal blocks, M3 × 4 cylinder screws are used while the case housing uses M3 × 4 black cross head countersunk screws. Next to be assembled are six metal blocks to the underside and two to the topside of the board. Attention must be paid that the counter sunk holes on the blocks are placed facing outwards rather than in, where later the housing pieces will be screwed in (pictures 20 and 26).

Two blocks are screwed into the ground plate and also the four rubber feet, for which we use M3 × 10 cross head screws, M3 nuts for which M3 washers are provided, the latter used for augmenting the rubberfoot squashing depth and serve to give a better bearing surface for the screw head (picture 28).

Then the front panel and the rear panel with the fixed elements of the main board are screwed together (don't forget the three M3 × 6 with nuts to fix the socket board). Finally the whole assembly is placed on the ground plate and fixed with the case housing screws. With the case now open, the lid should be correctly orientated according to the FA-AS configuration, and screwed in.

The FA-AS requires an earth connection to the rear panel (picture 25), for which there is an M3 × 8 crosshead screw a toothed washer and two M3 plain washers provided, furthermore the kit also comes with a soldering eyelet.

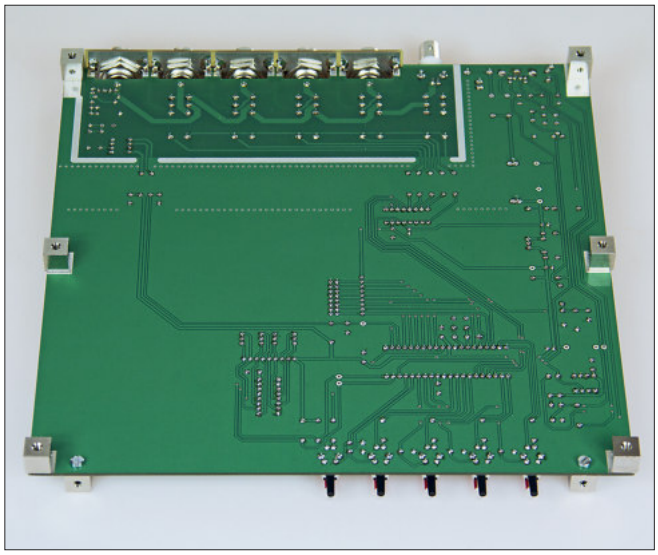

Picture 26. Board underside with the six metal blocks screwed in.

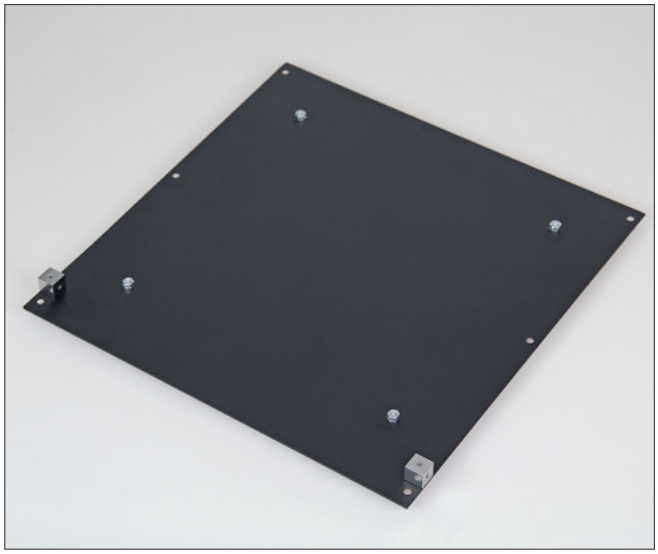

Picture 27. These two blocks on the base plate are used later to fix the sides.

Picture 25. Rear view of the fully built FA-AS; the earth symbol marks the housing screw which serves as the earthing point.

Picture 28. The four rubber feet on the underside of the base plate are useful later for a steadier stand.

Assembly of the control cables

For the first section we haven't needed the cable, nevertheless now that all the soldering work has been completed it is reasonable that it is prepared now. There are some special plug connections to make. In the kit there is a 13 pole DIN socket and a cable with a mini DIN plug attached at one end.
N.B. For a later connection of a CAT interface an ordinary (stereo) audio cable with a 3.5mm jacke plug may be used. Such cables are usually to be found in most shacks. The cable should be screened to avoid receive breakthrough on the CAT interface.

Most modern Icom transceivers are are furnished on the rear panel with a 13 pin DIN socket (ACC) with a uniform pin layout. On this basis the plug layout in picture 29 can be applied to most transceivers. A moment to check and verify with the handbook should enable the correct fabrication of the cable. It should be fairly easy to assemble the supplied 13 pole DIN plug and the cable with the 6 pole mini DIN plug.
Older Icom transceivers come with 7 and/or 8 pole ACC sockets, the socket connections are in the handbook.
We must find the pins for the line voltage, transmit/receive switching, operating voltage
(13.8V) and earth. Such plug connectors are available at e.g. [2].

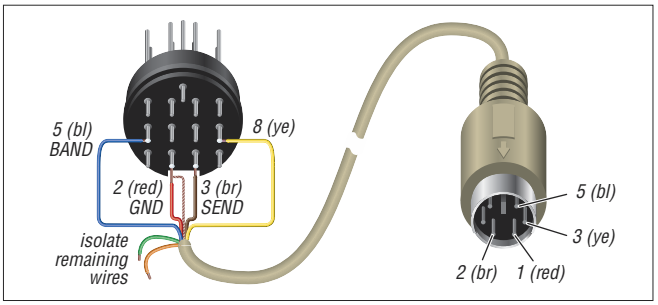

Picture 29. Example of the plug layout of the connecor cables between the FA-AS and Icom transceiver.

With the soldering and assembly of the cable one must beware of careless shortcircuiting between the connections. Certainly this would only send DC in the direction of the FA-AS but nevertheless should be done carefully. If the ACC socket is set up for another peripheral apparatus then a so called 'Y' cable must be installed with a plug and two parallel connected sockets at the ends. A parallel circuit of the ensemble is in principle not critical. The maximum load on the 13.8V pins of the ACC socket is given as 1A (see handbook). The FA-AS takes a maximum of 0.1A so that parallel connected apparatus shouldn't take more than 0.9A.

In the event that the power supplied by the transceiver is not wanted then alternatively batteries or DC supply to socket 7 are possible. However it should be noted that the FA-AS has no independent on/off switch so that this would need to be switched externally.

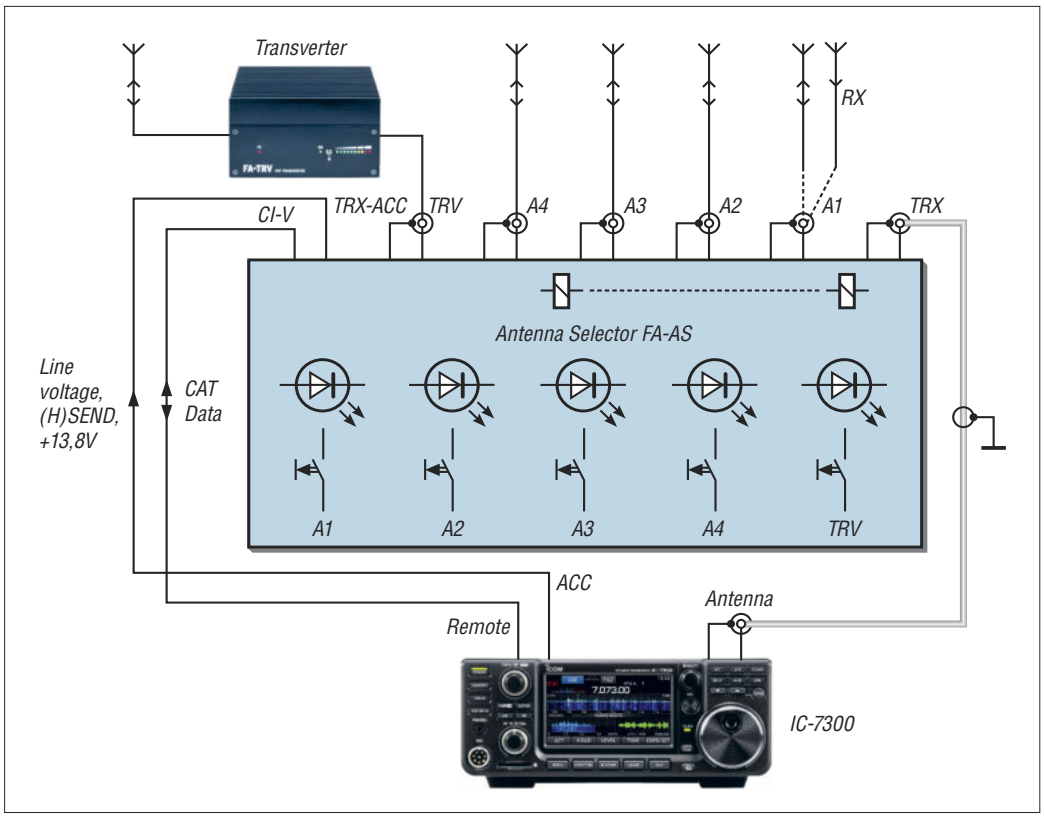

Picture 30. Connection of the FA-AS to an Icom transceiver.

Commissioning and functions testing

First, for commissioning, a jumper lead is connected to position 1 of the two pole connector strip J2 and the FA-AS, by way of the assembled DC cable and power supply (13.8V/0.2A) is powered up. As long as the working voltage is attached the microprocessor starts to work. This is confirmed by the short relay clicking and the subsequent flashing of the LED's. We'll go into this again later.
Where all remains quiet and unlit then we have a wealth of working voltages to check. 13V and 5V must be found at the check points on the main board. If not then perhaps the fuse is defective or not sitting correctly in its holder. Hook up a transceiver or receiver to the antenna socket 1 and set the frequency to 18.4320MHz in CW mode and a (faint) tone should be heard. This is the sign that the microprocessor is working. If nothing is heard then it could be a defective quartz Q1 or one of its connections shorting to earth.
Before the commissioning can continue the aforementioned "vital signs" of the microprocessor both audible and visible must be present otherwise there is the task of finding and replacing the failed component.
If everything up to this point is in order then the FA-AS can be disconnected from the power supply and the jumper wire removed. Picture 30 shows how the connection of the FA-AS to the transceiver and peripherals should be, for commissioning only the pair of cables shown on the left hand side are of interest.

Test of control by line voltage

Connect the FA-AS and the (powered down) Icom transceiver with the prepared control cable. There should be no jumper leads plugged into the J2 connector strip. The apparatus now finds itself in test mode, where it will now check the band information delivered from the transceiver and processed by the microprocessor. This mode can also be useful in some failure events. In test mode antennas will not be selected or stored. The bicoloured LED's on the front panel, having nothing to do with antennas 1 to 4, now serve separately as indicators. Immediately after switching on the transceiver the FA-AS will also be powered up over the control cable with 13.8V working voltage (see paragraph '*assembly of control cables*'). LED 1 briefly lights up and thereby signals the running through of the initialisation phase of the programme, after which, in test mode, a precise combination of LED's light up in accordance with the applied line voltage. This is set out in table 2.
Switching the transceiver to one of the amateur bands the appropriate LED's on the FA-AS must light up. At the test point BSP (near the fuse holder) measure the line voltage delivered from the transceiver against earth (test point M). This should be within the range given by Ubsp in table 2. Of note is that the WARC bands and the neighbouring classic bands are

Table 2. Band dependant LED combinations in test mode (line voltage only).

Band	U_{BSP} [V]	ANT 1	ANT 2	ANT 3	ANT 4
160m	6,7 … 8,3	green			
80m	5,8… 6,6		green		
60 m	4,7… 5,7	green	green		
40m	4,7… 5,7	green	green		
30m	0,0… 1,1*			green	
20m	3,8… 4,6		green	green	
17m	2,7… 3,7				green
15m	2,7… 3,7				green
12m	2,0… 2,6		green		green
10m	2,0… 2,6		green		green
6m	1,2… 1,9*	grün	green		green
4m	1,2… 1,9*	grün	green		green

* unspecified

Table 3. Band dependant LED combinations in test mode (CIV)

Band	*f* [MHz]	ANT 1	ANT 2	ANT 3	ANT 4
160m	0,1… 2,0	green			
80m	2,1… 4,0		green		
60m	4,1… 6,0	green	green		
40m	6,1… 8,0			green	
30m	8,1… 12,0	green		green	
20m	12,1… 16,0		green	green	
17m	16,1… 19,0	green	green	green	
15m	19,1… 23,0				green
12m	23,1… 26,0	green			green
10m	26,1… 30,0		green		green
6m	30,1… 53,0	green	green		green
4m	53,1… 72,0			green	green

Table 4. Set specific CIV address of some Icom transceivers.

Transceiver	CIV address
IC-7300	94H
IC-7200	76H
IC-7100	88H
IC-7000	70H
IC-7410	80H
IC-718	5EH
IC-706MKIIG	58H
IC-7400	66H
IC-756ProIII	6EH
IC-761	1EH
IC-765	2CH
IC-735	04H

Table 5. Configuration of the FA-AS

Position	Jumper	Result
1	plugged	working mode A
2	plugged	working mode B
3	open	9600 Baud
3	plugged	1200 Baud
6	open	transverter pwr → 10 %
6	plugged	transverter pwr → 1 %
7	open	transverter test routine off
7	plugged	transverter test routine on
8	open	CAT (S/E)
8	plugged	CAT (E)

gathered together with regards to the Icom line voltage. When everything is in order, the next step is to test the CAT interface. If you don't want to use this then you may skip the next section and all the installation.

Testing the CAT control

The transceiver is switched off again and the power cable for the FA-AS disconnected. The DC supply is again attached to the bench power supply with 13.8V @ 0.2A (don't switch on yet!), that way it's certain that the FA-AS has no line voltage. Otherwise this would be picked up by the controller and result in a not very obviously non functioning CAT interface.
For testing the CAT interface the 'remote' socket on the Icom transceiver should be connected by means of a regular stereo audio cable with a 3.5mm jack plug attached at both ends. The cable should be screened (see paragraph '*assembly of control cables*') if this fails or isn't enough, a knocking sound will be heard from the transceiver which is the data traffic running on the CAT interface, in which case you should invest in a higher quality cable. For this test there should be no other apparatus connected to the CAT interface.
In the transceiver setup menu, the CAT mode, *TRCV off* and the transmission rate of 9600 Baud should be selected. There shouldn't be any jumper leads plugged into J2. Finally the two encoder chips must be married to the address of the connected Icom transceiver. S6 is for the first place with S7 belonging to the second. The transceivers CIV address can be found in the handbook or in table 4. This address can be changed for other new apparatus via the transceiver setup menu, if that's the case then it is self explanatory that the address to the FA-AS must be changed.
After connecting the transceiver to the DC power the LED's must again light up according to table 3. There is an unequivocal combination for each band and here no undefined state or misinterpretation of commands can appear. If the CAT control doesn't work the overall installation should be checked before making any further adjustments to the transceiver and FA-AS. During this operation there must be a perceptible data impulse trace on an oscilloscope at J4 and J3. Failing this it could be a defective connecting cable.
If this is of no further help then the transceiver should be put into configuration mode and TRCV turned to '*on*' then everything retested. If the control now works it may perhaps be the selected CIV address of the FA-AS doesn't match that of the transceiver.
When the testing of the control by line voltage and CAT interface is complete, the final configuration of the FA-AS can be done.

Configuration

The necessary installations are dependant on the antennas and apparatus configuration of the user and are achieved, essentially, by plugging jumper leads into the J2 connector strip. Alterations in any other case requires the apparatus to be unscrewed.
Important Notice:
The configuration of the FA-AS is read by the micro processor only after the apparatus is switched on. Between times adjustments in a switched on state will only take effect after the apparatus has been switched off and then on again.

Working modes

The FA-AS has two modes of working. In mode A, all four antennas are equal and each may be individually programmed for automatic mode as desired. Working mode B takes with it the following variations. Select antenna 1 so the FA-AS sees this as a receiving antenna and the signal sent from the transceiver ACC socket is rated as SEND or HSEND by the FA-AS. When the transceiver is transmitting (signal PTT on socket 8), the FA-AS switches to antenna 2 as the transmit antenna. By arranging antennas 2 to 4 on amateur radio bands the FA-AS retains working mode A. Working mode A can be selected by jumper leads in position 1 and working mode B with jumpers in position 2 (table 5). If the CIV interface isn't going to be used then the thre following installations may be ignored.

Baudrate

The CIV Baud rate is decided by plug bridges at position 3. A plugged jumper gives 1200 Baud and unplugged it gives 9600 Baud. One should choose the highest appropriate Baud rate that the connected transceiver will support, which in most cases will be 9600 Baud.

Transceiver CIV address

Every Icom transceiver has a set specific CIV address. This means that several parallel connected receivers or transceivers may be controlled independantly of one another by a command set or PC software, it also facilitates data delivery. This address is given in the transceivers handbook (see also the section on CAT-control) and is installed on the FA-AS main board by the encoders S6 and S7.

Check routine for transverter mode

With active CAT control the FA-AS offers the possibility in conjunction with the switching of transceiver connections of a transverter which automatically reduces and regulates power when the 10m amateur radio band is selected. This of course if the transceiver being used supports such powering command requirements. Operating the TRV button will start up the checking and installation routine and, if the result is fault free, resolve the switching. When, for example, another

band is chosen the FA-AS doesn't switch. The FA-AS is not only sent the control signals over the CAT interface, additional separate instructions are also interpreted wherever they arrive from. During this (very short) time the LED flashes blue before thenn remaining lit after the switching. A plugged in jumper in position 7 of JP2 enables this function, with an open contact (unplugged) it is disabled.

Drive power in transverter mode

With a jump lead at position 6 one can decide whether the reduction in output power should be 10 % (open contact) or 1 % (plugged in jumper) of the nominal output power. At the end of use in transverter mode, the suppressed output power automatically resets, this, of course, if the FA-AS hasn't been switched off.
After finishing the configuration the top cover of the case must be fixed in place with six countersunk housing screws. The FA-AS is now ready for operation.

In use

Picture 30 shows the typical wiring layout of the FA-AS in the shack. Corresponding to the local layout the antennas are connected to the sockets ANT 1 to ANT 4, an existing transverter to the BNC socket TRV and the transceiver to the SO 239 socket TRX. The same goes for the connection between FA-AS and transceiver by way of power and, if applicable, CAT cable.
After turning on the apparatus (DC to socket 7 or socket 8) the initiallising phase of the software will run. The microprocessor reads the jumper position on J2 together with the hexadecimal switches S6 and S7 and sets agreed parameters. ANT 1 flashes briefly during this before staying lit green. This checks that the FA-AS has a valid line voltage about 2V connected (30m, 6m or 4m shouldn't be selected) and that the transceiver delivers a valid frequency (1.8… 72MHz). During the line voltage check ANT 2 blinks, during the CAT check ANT 3 blinks. Whenever a check is successful the requisite LED lights up and stays lit. During these testing stages no further equipment should be connected to the CAT interface.
Where the software data source has not been recognised or after about 15 seconds and the checking time threshold has been reached, this will be shown as 3 flashes, and colour according to table 6. (The time threshold installed is quite long, this is to allow for transceivers that after turning on require a little time to fully power up). In this phase antennas will not be selected, only ANT 1 although switched off is associated with the TRX connection.
Finally, switch the FA-AS, in its required condition, to the working mode desired (automatic or manual).

Programming the antenna allocations

The allocating of antennas to the selected amateur radio bands (programming the FA-AS) is thankfully simple. You set up a band and briefly press the associated buton, ANT 1 to ANT 4 for an antenna slot, then pressing the same button again for longer than 1 second before letting go. The nearest red LED lights up briefly then lights up again and changes colour to green. Thereby the allocation of the antenna to the selected band is stored. The procedure is to be repeated for all amateur radio bands. The allocation can be changed at any time.

Table 6. Significance of flashing LED's after running the interface tests.

LED's after switch on				Significance			
ANT 1	ANT 2	ANT 3	ANT 4	Line voltage present	CIV	Automatic mode	Manual mode
green	green	green	green	yes	yes	×	
green	green	red	red	yes	no	×	
red	red	green	green	no	yes	×	
red	red	red	red	no	no		×

The FA-AS is now set up for automatic mode use and requires no further handling for as long as the transceiver delivers valid control signals.

Automatic mode

On selection of a band it automatically switches to the stored antenna and the associated LED lights up green. After each band change the FA-AS always selects the last stored matching antenna. The LED's light and stay green. A gentle press of a button temporarily switches the FA-AS and the related antennas on the transceiver to manual mode (LED's light red). After each band change the FA-AS automatically resets to automatic mode.

Manual mode

In the case of forced manual mode use, on the grounds of failure of line voltage or CAT data, after powering up the FA-AS always switches to ANT 1 and the associated LED lights red. Any of the other antennas may be selected by pressing the associated button and its LED will light up red.

Transverter mode

The FA-AS offers the possibility by the press of a button to switch the transceivers antenna connection to the input of a transverter. After which may follow a checking of the installed bands and an automatic reduction of transmitter power so that the transverter input isn't mistakenly overloaded. (Details see paragraph "*Configuration*"). This function cannot be overidden. The transverter mode is selected by a short press of the TRV button, then the LED found just above will light up blue. The LED will flash blue during this routine. A further press of the TRV button exits the transverter mode and switches the transceiver back to an antenna according to the selected band.

Further possible applications

antenna. The transverter test routine (see paragraph "*Configuration*") is then completely disconnected. This antenna may then be selected by a button press although it isn't available in automatic mode.
In place of an antenna a load resistance may be connected which for example, at the press of a button on the transceiver, may comfortably allow for the conducting of sequential measurements.
The FA-AS can also be 'reversed' in that it may serve one antenna yet several transceivers or receivers. Then the antenna is connected to the TRX socket and the sets to the antenna sockets. Selection is possible in manual mode by button press.

Footnote on use with the CAT interface

The use of the CAT interface is appropriate if the distinction of the amateur radio bands is too inaccurate based solely on the line voltage (for instance if the WARC bands or the 60 m band should be assigned to individual antennas). If the CAT interface on the transceiver is not yet occupied, it is sufficient to connect the socket labeled *Remote* with a 3.5 mm jack cable to the CI-V socket of the FA-AS and to observe the corresponding notes in the previous sections.
If the interface is already occupied by one or more other devices (for example PC with control or logbook program), the working mode of the CAT interface of the FA-AS should be adapted accordingly. This is done by putting a jumper on position 8 of pin header J2. After restarting the FA-AS, it will no longer operate in active transmit-receive mode (S / E) with respect to CI-V, but in passive receive mode (E), see also Table 5. This means that the FA-AS will use the Interface only "overheard" and only then reacts when other connected devices exchange frequency data. Data collisions on the interface, which would otherwise be unavoidable when querying the transceiver operating data, can no longer occur.
For the transceiver to send the current frequency data to the CI-V interface during manual tuning (and the FA-AS can "hear" something), its CAT interface must be set to *TRCV On* via the setup menu. It is of course important to ensure that all connected devices work at the same baud rate.
Note: In this working mode of the CAT interface it is also possible to cascade several FA-AS and thus switch over more than four antennas. Each additional device adds three antennas. (One connection is needed to loop through the RF signal.)
Have fun and enjoy building and using the FA-AS automatic antenna selector.

shop@funkamateur.de

Literatur:

[1] Schmücking, P., DL7JSP: Antennenumschalter FA-AS für IC-7300 & Co. FUNKAMATEUR 65 (2016) H. 12, S. 1153–1157
[2] Reichelt Elektronik GmbH & Co. KG, Elektronikring 1, 26452 Sande, Tel. (04422) 955-333, Fax -111; *www.reichelt.de*

Parts list

Abbreviation	Type/value	Quantity
Socket 6	BNC socket	1
Socket 7	DC socket 2.1mm	1
Socket 8	6 pole mini DIN	1
Socket 9	3.5mm jack plug	1
Socket 1, 2, 3, 4, 5	PL socket	5
C4	8.2pF, RM2,5	1
C5	1nF, RM5	1
C16	470nF, Z5U, RM5	1
C25	10µF/50V, RM2,5	1
C1, C2, C3	5.6pF, RM2,5	3
C19, C20	22pF, RM5	2
C28, C29, C30, C31, C32	10nF, RM5	5
C6, C8, C9, C10, C11,		
C12, C15, C17, C18, C21,		
C22, C23, C24, C26, C27	100nF, RM5	15
C7, C13, C14	100µF/25V, RM2,5	3
IC1	PIC16F887	1
IC2	MIC5891	1
IC3	µA7805	1
IC4	6N139	1
IC5	SN75451	1
IC6	PCF8574A	1
J2	contact strip	1
	jumper	4
	40 pole IC mount	1
K1, K2, K3, K4, K5	12V relay	5
L1, L2, L3, L4, L5,		
L6, L7	220µH	7
LED5	LED blue	1
LED1, LED2, LED3,		
LED4	LED red/green	4
Q1	Quartz, 18.432MHz	1
R3	2.4kΩ	1
R13	2.2kΩ	1
R4, R8, R14, R15, R16,		
R17	4.7kΩ	6
R1, R2, R7	4.7kΩ 1 %, 0.6W	3
R10	5,1kΩ 1 %, 0.6W	1
R18, R19, R20, R21	220Ω	4
R5, R9, R22	10kΩ	3
R6, R11, R12	1kΩ	3
RN1, RN2	8 × 10kΩ	2
S1, S2, S3, S4, S5	Push button switches	5
S6, S7	Hex code switches	2
VD3	1N5711	1
VD7	5.1V	1
VD1, VD2	1N4007	2
VD4, VD5, VD6, VD8,		
VD9	1N4148	5
VT1	SF828	1
DC plug connector	Hollow round 2.1mm plug	1
F1	Fuse holder	1
	Fuse 250mA	1
Made up cable	Plug: mini DIN6	1
DIN plug	13 pole	1
Main board		1
Socket board		1
Silvered copper wire	CuAg, 1mm	10cm
Insulation		25cm
Housing lid		1
Housing base plate		1

Abbreviation	Type/value	Quantity
Front panel		1
Rear panel		1
Metal blocks		10
Cylinder screws M3 × 4		8
Cylinder screws cross head M3 × 8		1
Cylinder screws cross head M3 × 10		4
Countersunk screws cross head M3 × 4		18
Countersunk screws cross head M3 × 6		3
Nuts M3		7
Washers M3		10
Toothed washer M3		1
Solder eyelet M3		1
Rubber feet		4
Instruction manual		1

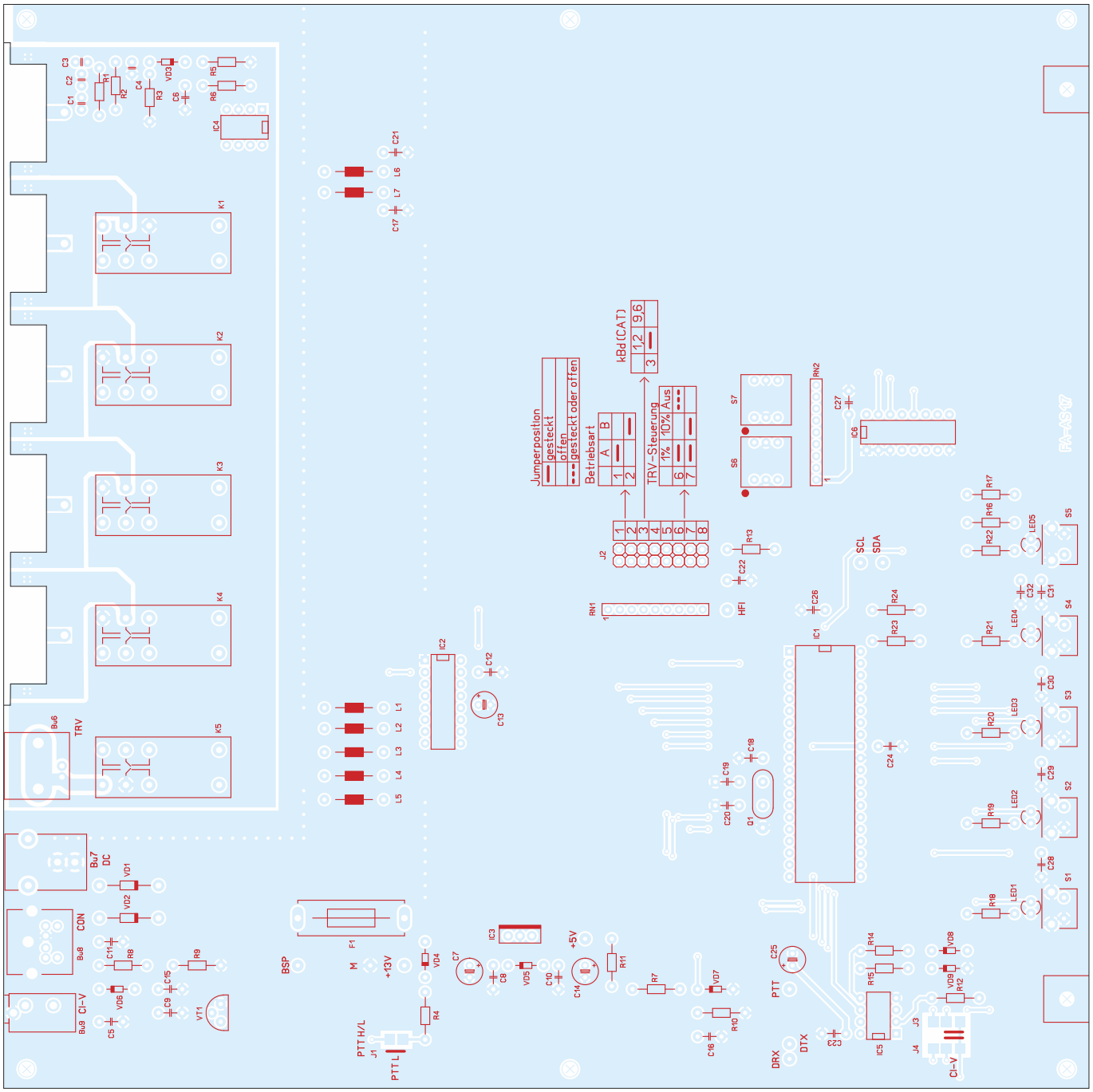

Picture A1. Mounting plan of the Automatic Antenna Selector FA-AS

FUNK AMATEUR POWERED BY HAM SPIRIT

BX-7300 (February 2018)